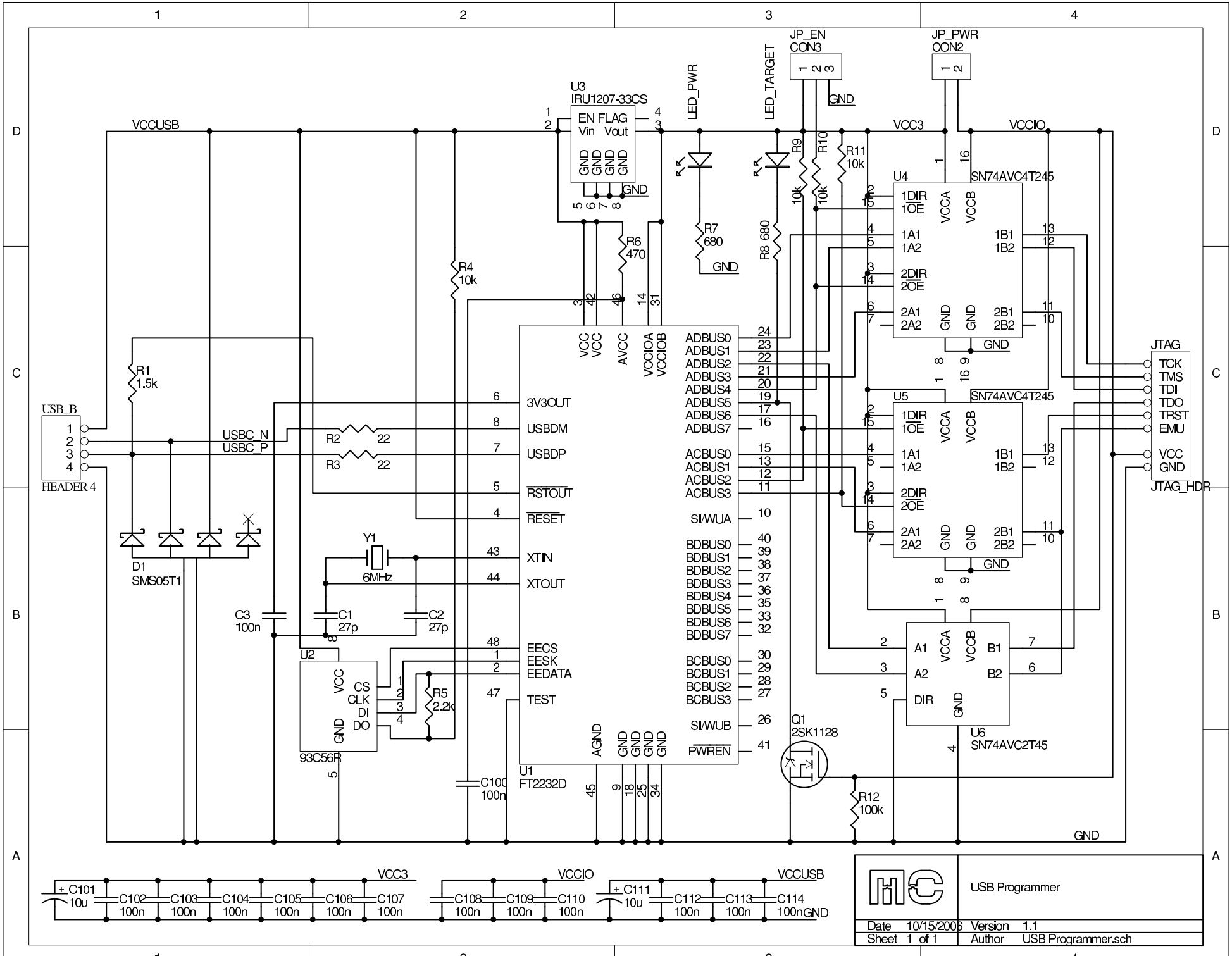
USB Programmer
Date 10/15/2006 Version 1.1
Sheet 1 of 1 Author USB Programmer.sch
U1 FT2232D
U2 93C56R
U3 IRU1207-33CS
U4 SN74AVC4T245
U5 SN74AVC4T245
U6 SN74AVC2T45
Q1 2SK1128
USB_B HEADER 4
JTAG JTAG_HDR
JP_EN CON3
JP_PWR CON2
D1 SMS05T1
Y1 6MHz
VCCUSB
VCC3
VCCIO
GND
USBC_N
USBC_P
LED_PWR
LED_TARGET
3V3OUT
USBDM
USBDP
RSTOUT
RESET
XTIN
XTOUT
EECS
EESK
EEDATA
TEST
ADBUS0
ADBUS1
ADBUS2
ADBUS3
ADBUS4
ADBUS5
ADBUS6
ADBUS7
ACBUS0
ACBUS1
ACBUS2
ACBUS3
SI/WUA
BDBUS0
BDBUS1
BDBUS2
BDBUS3
BDBUS4
BDBUS5
BDBUS6
BDBUS7
BCBUS0
BCBUS1
BCBUS2
BCBUS3
SI/WUB
PWREN
TCK
TMS
TDI
TDO
TRST
EMU
VCC
GND
R1 1.5k
R2 22
R3 22
R4 10k
R5 2.2k
R6 470
R7 680
R8 680
R9 10k
R10 10k
R11 10k
R12 100k
C1 27p
C2 27p
C3 100n
C100 100n
C101 10u
C102 100n
C103 100n
C104 100n
C105 100n
C106 100n
C107 100n
C108 100n
C109 100n
C110 100n
C111 10u
C112 100n
C113 100n
C114 100n

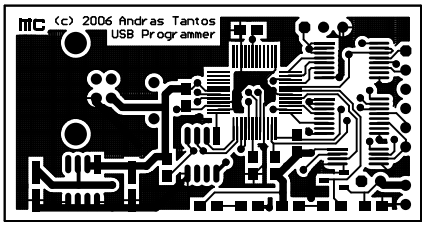
(c) 2006 Andras Tantos
USB Programmer

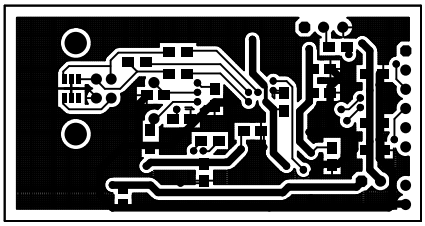

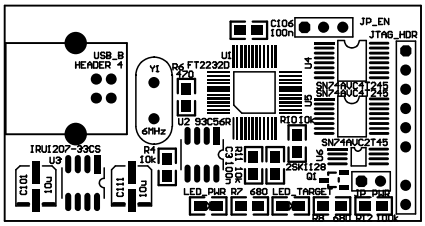
C106
100n
JP_EN
JTAG_HDR
USB_B
HEADER 4
Y1
6MHz
R6 FT2232D
120
U5
U2 93C56R
R1 10K
SN74AUC2T245
SN74AUC2T245
SN74AUC2T245
IRU1207-33CS
U3
R4
10K
C10
10u
C11
10u
C3 100n
R11 10K
2SK1220
Q1
J2-PWR
LED_PWR R7 680 LED_TARGET
R8 680 R12 1M0